Speed_manual size : 305*170

TOBOT SUPER RACING

© YOUNG TOYS, INC. All Rights Reserved

SUPER RACING USER MANUAL

YOUNG TOYS

8+

Batteries not included AA X 2

SPEED

Components

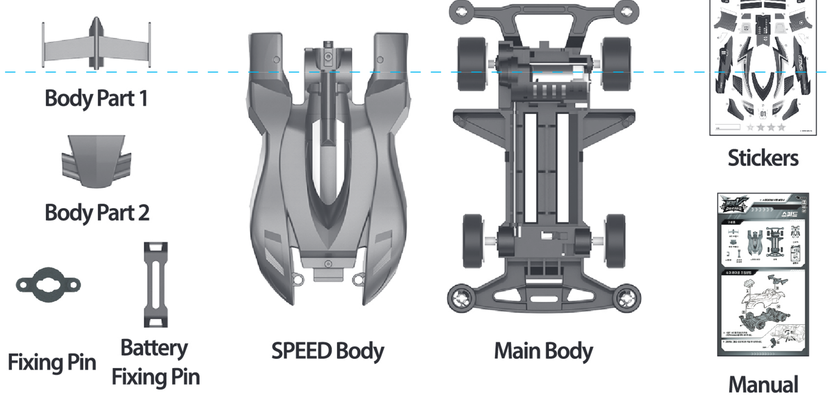

How to assemble Super Racing

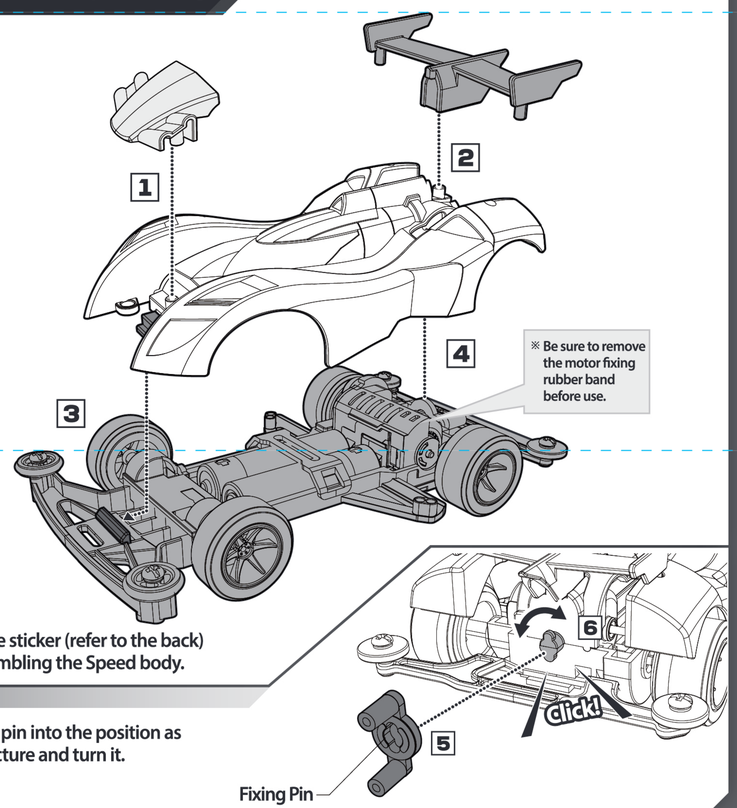

※ Please attach the sticker (refer to the back) first before assembling the Speed body.

※ Insert the fixing pin into the position as shown in the picture and turn it.

512495

Attaching sticker

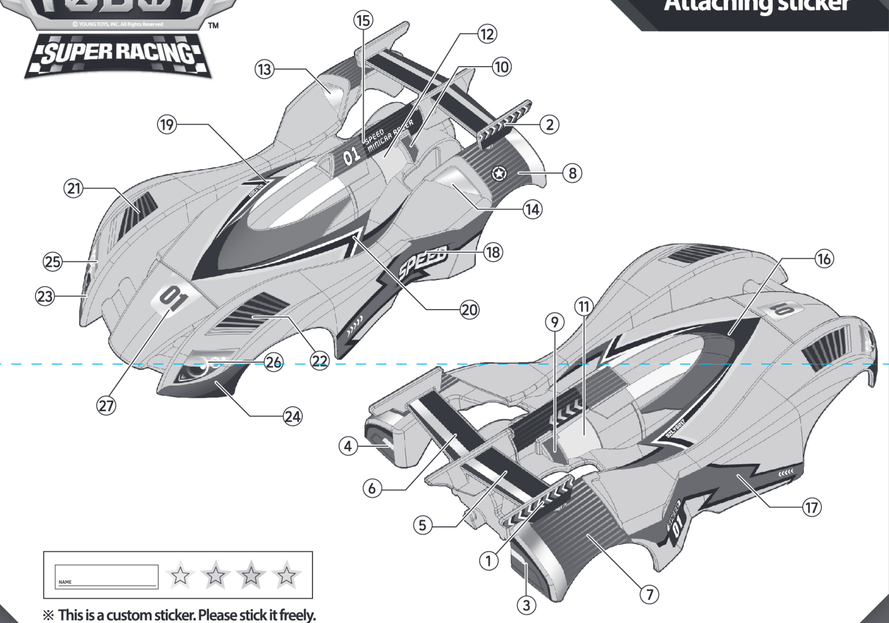

NAME ☆ ☆ ☆ ☆

※ This is a custom sticker. Please stick it freely.

How to replace batteries

1 Assemble the battery according to the ⊕⊖ pole.
(When assembling, be sure to turn off the power switch.)

2 Please insert the battery fixing pin until you hear a Click!

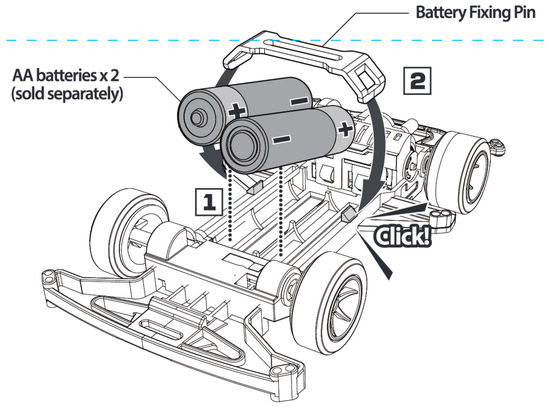

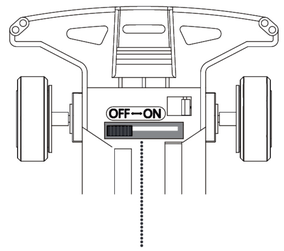

OFF ⟷ ON

Always turn off the ON/OFF button when the product is not in use.

How to use batteries

- Some batteries may not work. Try using other batteries again.
- Do not mix old and new batteries or use different forms of batteries together. Never use rechargeable batteries.
- Do not use batteries from different companies. This may cause batteries to leak and cause product malfunction.
- Correctly insert the positive and negative sides of the battery. Failure to do so may result in overheating.
- Parents or guardians must help with the insertion and replacement of batteries.
- Remove the batteries when not using this product for more than a week. Battery fluid may leak and cause product malfunction.
- If the liquid leaking from the battery gets into your eyes, wash immediately and consult a doctor. If it gets on your skin or clothes, wash it off with water.
- Always turn off the product when not in use. There is a risk of battery discharge.
- When replacing the batteries, turn off the power, replace the batteries, and collect them separately.

2 AA batteries of 1.5V are sold separately.

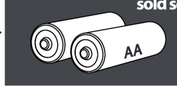

⚠ WARNING

-Parents must read. -Be sure to keep important handling precautions from the package.
-Never climb or step on it. -Applying a strong impact may cause injury to the damaged area.
-Never use it in places where there is a risk of falling, such as stairs.
-For safety, do not use disassembled, damaged or deformed ones.
-It is dangerous to throw the body or accessories at people or objects.
-Use with caution as there is a risk of your fingers getting caught in the body or components.
-Do not cut, charge, disassemble, heat, or dispose of in fire or water.
-Do not shake the body by force. There is a risk of damage.
-Please refrain from pressing the button with excessive force or pressing it continuously. There is a risk of malfunction.
-There is a risk of injury to the edges or corners of the product, so use with caution.
-Please use the product under the guidance of a guardian.
-After opening the packaging, please put it out of reach of children.
-After play is over, parents must keep it out of reach of children under the target age.
-Please refrain from turning the locking device with excessive force as it may cause damage.
-Be sure to read the precautions before using.
-Do not operate the minicar on the street, in puddles, or around children and in crowded areas.
-When running the minicar on the track, the minicar may unexpectedly leave the track. Keep your face away from the track and make sure there are no dangers around you.
-When operating the minicar, do not touch the wheels as the motor heat can accumulate and damage the minicar.
-Keep hands, clothes and hair away from moving parts such as wheel gears.
-Be careful when stopping a running minicar as there is a risk of injury.
-Foreign objects such as lint or debris caught on the shaft shaft can interfere with rotation and cause the motor to overheat. Be sure to check before operation.
-Do not operate the minicar if the parts are damaged or deformed.
-The product may have sharp edges in function. Please be careful when using.

⚠ WARNING

0-3

- This product contains small parts that can cause suffocation when swallowed. As such, children under 3 years of age may not use this product.
- Do not put the product in the mouth as it may release phthalate plasticizers.

MADE IN CHINA

*Please be noted the actual product and photos may differ

*Do not throw away the components in the package, including the package. (The package contains important information.)

YOUNG TOYS